WUHLF
EQUIPMENT (PTY) LTD

JX450

BACKHOE LOADER

VERSATILE POWER. PRACTICAL PERFORMANCE.



OVERALL DIMENSIONS

Length	5,919 mm
Width	2,300 mm
Height	3,460 mm

CONFIGURATION

Engine	Yuchai 4-Cylinder Diesel
Drive	2x4 / 4x4 Application
Tyres	Front 14-17.5 Rear 19.5L-24

OPERATING WEIGHT	RATED POWER	LOADER BUCKET	BACKHOE BUCKET
8,600 kg	75 kW	1.0 m³	0.3 m³

HEAD OFFICE | Wallmannsthal Offramp, N1 North, Pretoria
012 004 2000 · 012 004 2001 · sales@wuhlf.co.za · www.wuhlf.co.za

QUALITY WITHOUT COMPROMISE

JX450

TECHNICAL SPECIFICATIONS

WUHLF EQUIPMENT

DIMENSIONS & WORKING GEOMETRY

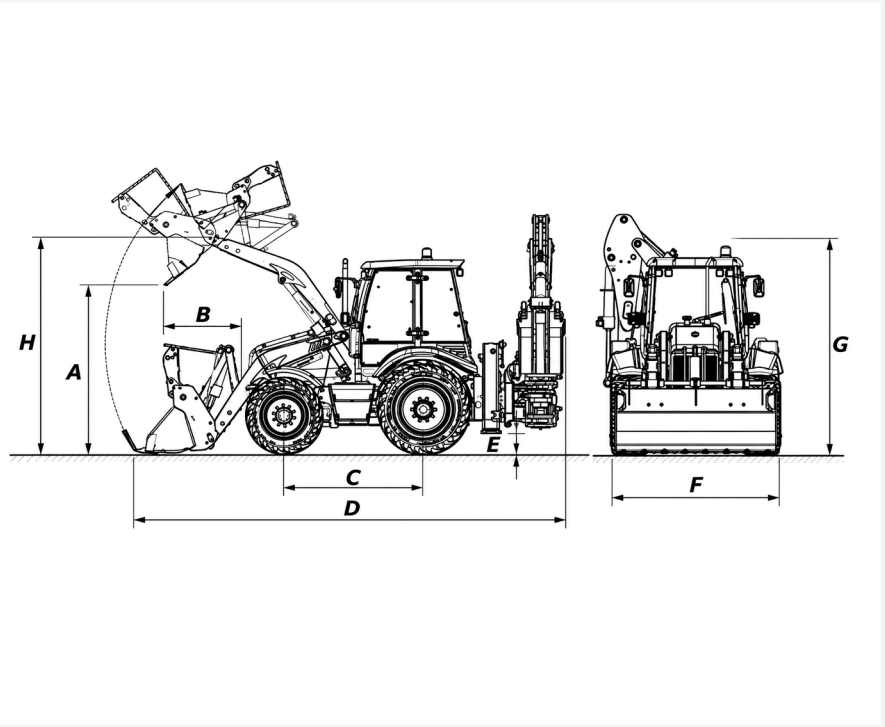

A	Maximum dump clearance	2,610 mm	E	Min. ground clearance	370 mm
B	Dumping reach	1,062 mm	F	Overall width	2,300 mm
C	Wheelbase	2,200 mm	G	Overall height	3,460 mm
D	Overall length	5,919 mm	H	Max. dumping height	3,400 mm

PERFORMANCE

Loader bucket capacity	1.0 m³
Backhoe bucket capacity	0.3 m³
Breakout force	38 kN
Minimum turning radius	6,581 mm
Load lifting capacity	2.5 ton
Maximum digging depth	4,082 mm
Maximum climbing gradient	30°

TRAVEL SPEED

Forward — low	8 km/h
Forward — high	35 km/h
Reverse — low	8 km/h
Reverse — high	16 km/h

ENGINE & TYRES

Engine type / model	4-cylinder diesel / Yuchai
Rated power	75 kW
Rated speed	2,400 rpm
Front tyre size	14-17.5
Rear tyre size	19.5L-24

TANK CAPACITIES

Fuel tank	145 ℓ
Hydraulic oil tank	145 ℓ
Engine oil	20 ℓ
Gearbox oil	20 ℓ
Differential oil	30 ℓ

TRANSMISSION, STEERING & SYSTEMS

Transmission	Hydraulic torque converter
Steering	Front-wheel hydraulic steering
Working hydraulics	Hydraulic joystick control
Working system pressure	12 MPa
Bucket delivery time	5.4 s
Foot brake	Dry brake system

HEAD OFFICE | Wallmannsthal Offramp, N1 North, Pretoria
012 004 2000 · 012 004 2001 · sales@wuhlf.co.za · www.wuhlf.co.za